ITEM	PART NO.	DESCRIPTION	QTY.
1	251516-01	GEAR DRIVE COVER STANDARD CAM BIG BLOCK CHEVY	1
2	250521-05	CRANK GEAR BIG BLOCK CHEVY	1
3	251537-01	FLANGED INSERT FOR BIG BLOCK CHEVY IDLER GEAR BRACKET	2
4	251537-02	FLANGED INSERT FOR BIG BLOCK CHEVY IDLER GEAR BRACKET WITH .	1
5	250521-30	IDLER GEAR STANDARD 25 TOOTH 10 DP	1
6	251506-15	IDLER GEAR AXLE BIG BLOCK CHEVY	1
7	251511-01	IDLER GEAR BRACKET BIG BLOCK CHEVY STANDARD CAM	1
8	350501-02	BRG SIDE PLATE 0.99 ID 1.69 OD	1
9	350541-40	ROLLER BRG INNER RACE	1
10	350540-40	30 X 37 X 16 ROLLER BRG CAGE	1
11	356837-12	0.375-24 X 0.75 FHCS SOCKET FLAT HEAD BOLT	3
12	251526-01	CAM HUB 7 HOLE BIG BLOCK CHEVY	1
13	350592-60	TRA-3446 thrust washer	2
14	350590-60	2.125 X 2.875 X 0.078 NEEDLE THRUST BRG	1
15	250521-63	CAM GEAR 48 TOOTH 10 DP 7 HOLE VERNIER	1
16	356331-16	5/16-18 X 1.0 12PT	3
17	357931-13	5/16-24 X 0.82 12PT	7
18	350592-36	TRA-1625 THRUST WASHER	2
19	350590-36	1.00 X 1.562 X 0.078 NEEDLE THRUST BRG	1
20	350597-0002	1.00 X 1.562 THRUST SHIM KIT	1
21	202022-09	POINTER T STYLE 1.25 TALL	1
22	250540-01	SEAL HOUSING FOR STANDARD FRONT COVER BBC AND ALL CHRY	1
23	351550-39	039 "O" RING 0.07 X 2.807	1
24	352503-04	1/4 AN WASHER	12
25	356325-10	1/4-20 X 0.625 12PT	2
26	356810-08	10-32 X 0.50 FHCS	3
27	354510-12	WOODRUFF KEY CRANK GEAR-CUT DOWN	1
28	353010-20	0.25 X 1.25 STUD	10
29	351569-15	BBC O-RING ROPE	1
30	355425-60	HEX FLANGED NUT	10
31	351515-58	2.328 X 3.00 X 0.395 SEAL NEOPRENE 1 LIP	1

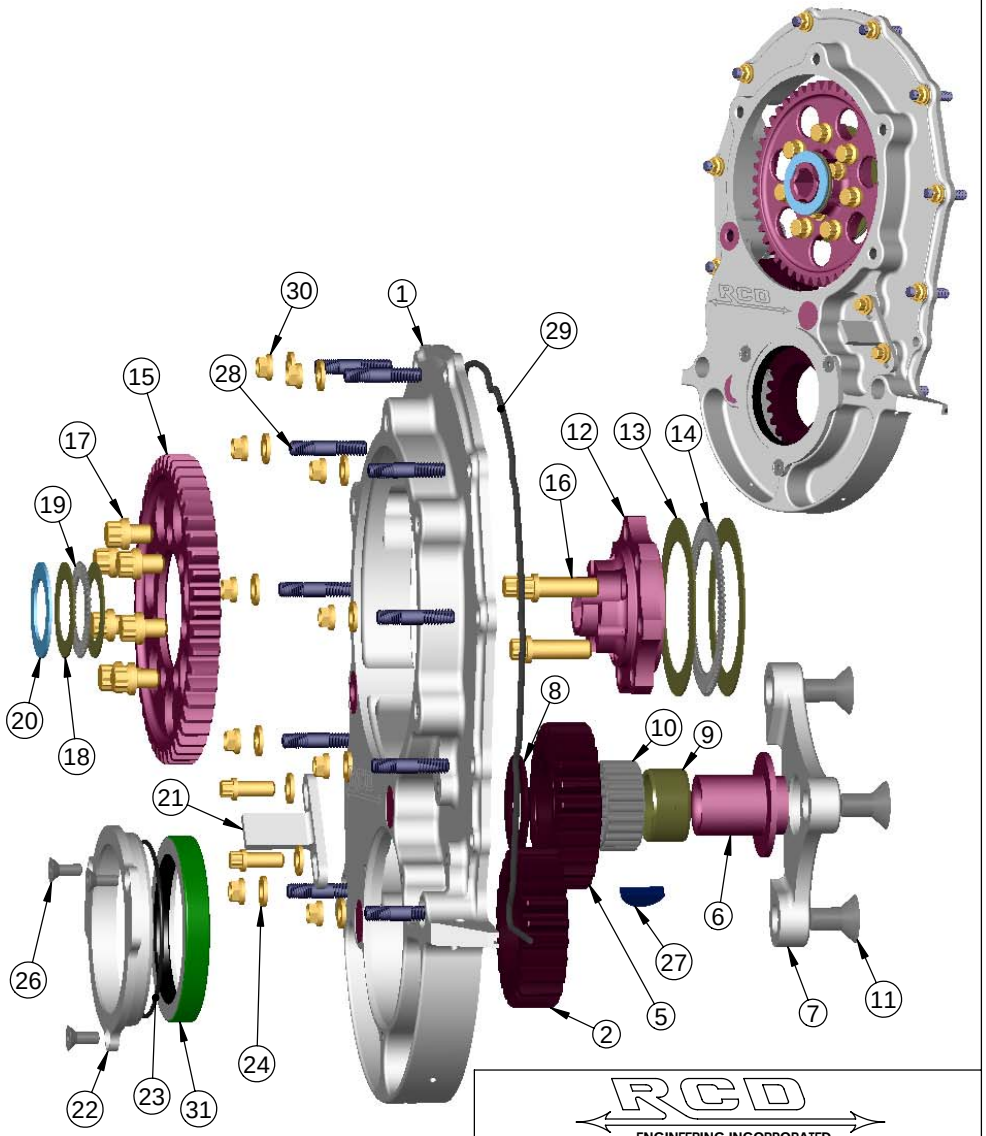

RCD ENGINEERING INCORPORATED
TEL: 530-292-3133 - FAX: 530-292-3738

BBC GEAR DRIVE STD

PART. NO. 251500-0002 | B | SHEET 1 OF 1